RANCILIO

coffeeing the World

RMD650D v.14

SPARE PARTS CATALOGUE

en-US

KRYO 65 OD

GRINDERS

Index

Table 03815/13 - HOUSING KRYO 65 On Demand....4
Table 03825/13 - GRINDING CHAMBER AND MOTOR KRYO 65 On Demand....6
Table 03840/13 - ON DEMAND SYSTEM....8
Alphanumeric index....10

03815/13

HOUSING KRYO 65 On Demand

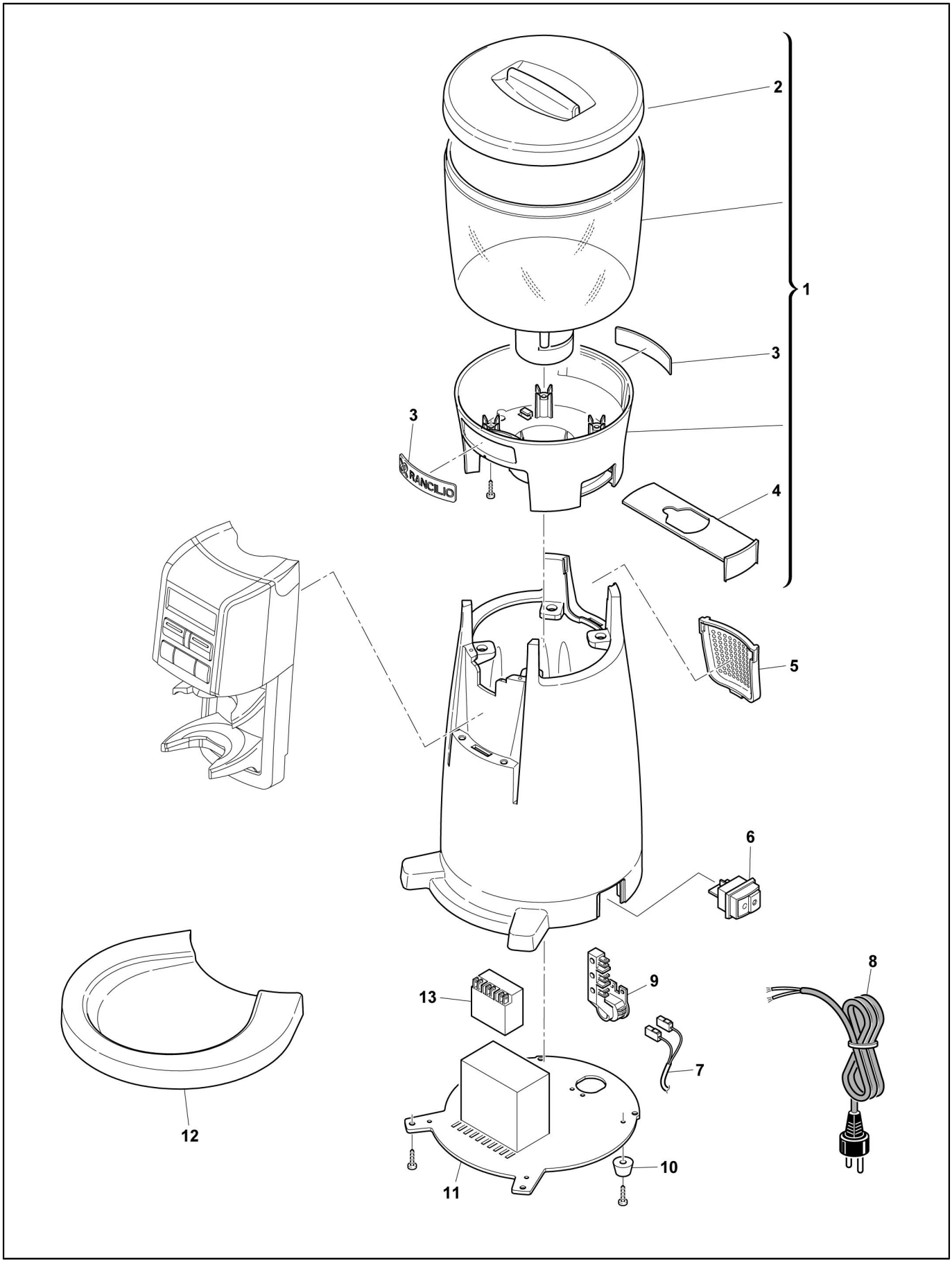

POS.	CODE	DESCRIPTION	NOTES
1	14705016	Bean hopper KRYO 65	
	14705022	ADAPTER KIT COFFEE TIN KRYO 65	
2	38120158	Lid for bean hopper KRYO 65	
3	42200134	RANCILIO PLATE KRYO 65	
4	38120167	SLIDER BEAN CLOSING KRYO 65	
5	38120169	GRID FRAME KRYO 65	
6	34030971	SWITCH GREEN LIGHT	
7	14013030	KRYO OD WIRING	
8	34300049	CABLE WITH PLUG	
	34300052	CABLE WITH PLUG AUSTRALIA	
	34300085	CABLE H05RN-F 3X0,75 L=2000 WITH PLUG	
	34549025	CABLE H05RN-F 3X0,75 L=2000 +SP UK	
9	34200271	CLAMP VERTICAL WIRING FIXER	
10	36310016	RUBBER FOOT 22 X 15	
11	14705020	BASEPLATE KRYO 65	
12	38120168	POWDER CONTAINER KRYO 65	
13	34070221	MAIN BOARD KRYO OD 230V	
	34070222	MAIN BOARD KRYO OD 110V	

03825/13

GRINDING CHAMBER AND MOTOR KRYO 65 On Demand

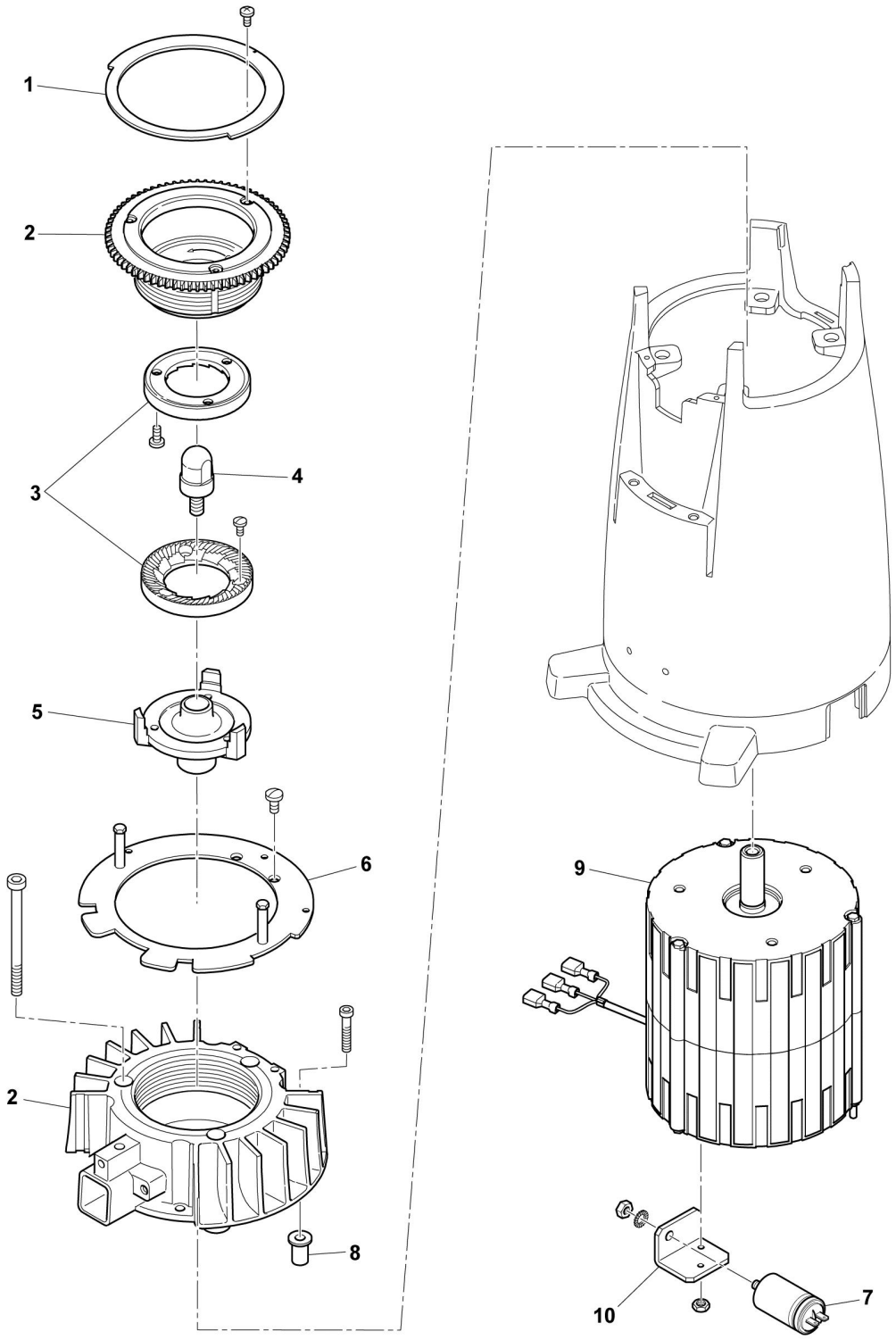

03825/13

GRINDING CHAMBER AND MOTOR KRYO 65 On Demand

POS.	CODE	DESCRIPTION	NOTES
1	32330281	GRINDING REGULATION RING	
2	10701009	KIT BURR HOLDER WITH COFFEE SLIDER	
3	69000306	BURRS COUPLE 63,5 TREATMENT	
4	26216006	SCREW BURRS HOLDER KRYO OD	
5	21300521	BURR HOLDER NSF KRYO 65	
6	14705019	PLATE KRYO 65	
7	34020035	CAPACITOR 14MF 220-240V 425V KRYO OD	
	34020036	CAPACITOR 50MF KRYO OD 110V	
8	36322005	THREADED INSERT M5X17	
9	34014085	MOTOR V110 MD	
	34014086	MOTOR V230 MD	
10	32331782	CAPACITOR BRACKET	

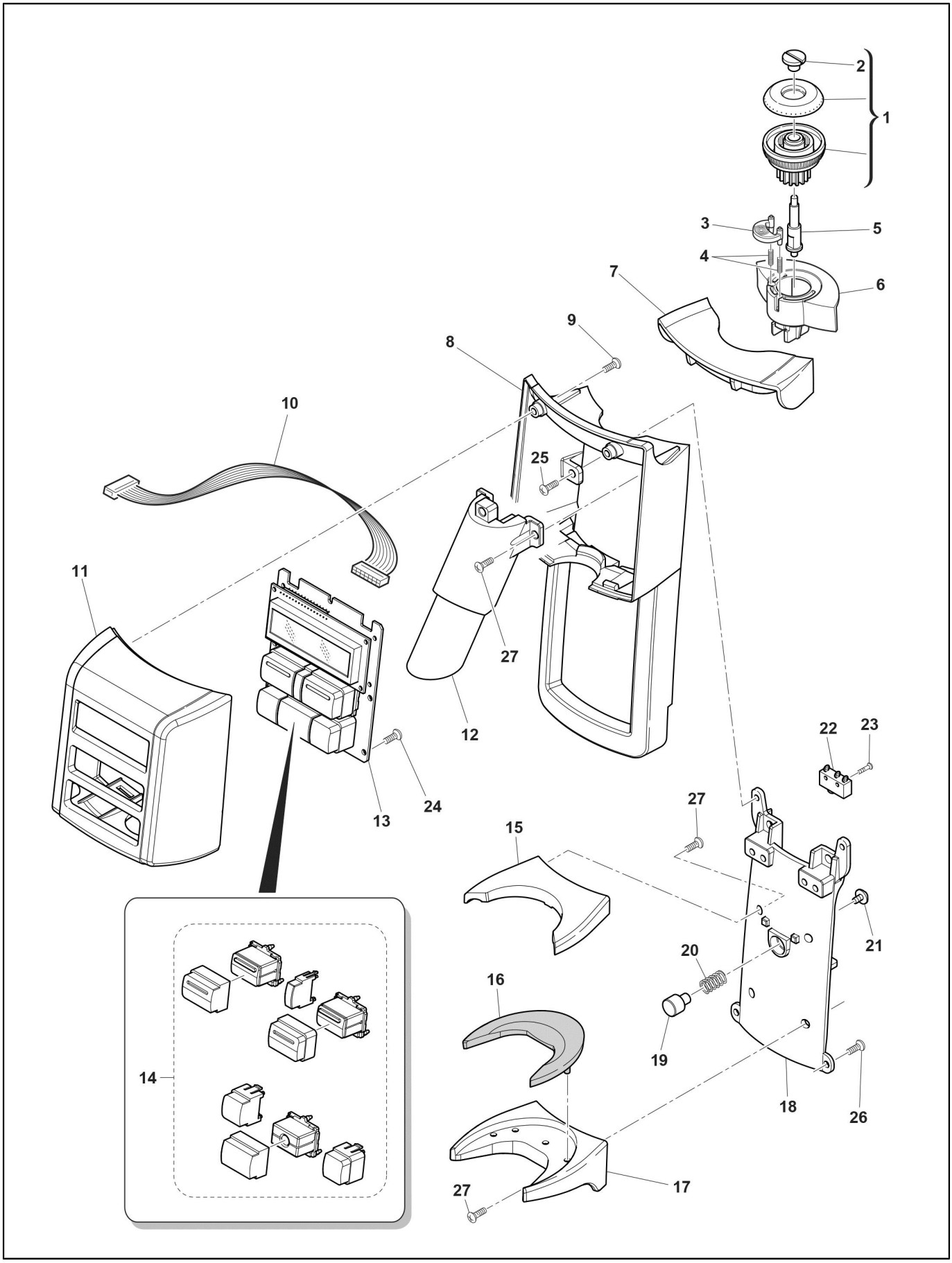
1
2
3
4
5
6
7
8
9
10
11
12
13
14
15
16
17
18
19
20
21
22
23
24
25
26
27
27
27

POS.	CODE	DESCRIPTION	NOTES
1	10701172	RETROFIT KIT GRINDING REGULATION KRYO	
	14705018	KIT GRINDING REGULATION KRYO 65	
	38120171	LOWER REGULATION KNOB KRYO 65	
2	23000297	SCREW CARTER HANDLE HOLDER KRYO 65	
3	38120276	CARTER PIN GRINDING REG. KRYO 65	
4	39120035	MD PIN SPRING	
5	23000296	LATCH KNOB CARTER KRYO 65	
6	38120275	CARTER 2 PIN GRINDING REG. KRYO 65	
7	38120188	CARTER LID KRYO OD	
8	38120186	CARTER KRYO OD	
9	00039102	HEX SOCKET HEAD SCREW M3 X 8	
10	14013029	FLAT CABLE KRYO OD	
11	10701141	CARTER+SCREW KRYO OD	
12	10705758	RETROFIT KIT COFFEE SLIDER KRYO OD	
13	34070220	KEYBOARD KRYO OD	
14	34070230	BUTTON KIT KRYO OD	
15	21202031	UPPER FORK KRYO OD	
16	38120166	FORK INSERT KRYO 65	
17	21202032	LOWER FORK KRYO OD	
18	21202033	FORK BRACKET KRYO OD	
19	36990043	MICRO BUTTON KRYO OD	
20	39220019	SPRING MICRO BUTTON KRYO OD	
21	36990044	MICRO BUTTON SCREW KRYO OD	
22	34100020	MICRO START/STOP KRYO OD	
23	37010210	SCREW M2 X 10 TC	
24	37155004	SCREW 3X10 TCB CROS PH	
25	37030408	SCREW M 4 X 8	
26	00001062	RAISED CHEESE HEAD SCREW M3 X 6 MM	
27	00000932	HEX SOCKET HEAD SCREW M5 X 12 MM	

Alphanumeric index

Code	No. table	Pos.
00000932	03840/13	27
00001062	03840/13	26
00039102	03840/13	9
10701009	03825/13	2
10701141	03840/13	11
10701172	03840/13	1
10705758	03840/13	12
14013029	03840/13	10
14013030	03815/13	7
14705016	03815/13	1
14705018	03840/13	1
14705019	03825/13	6
14705020	03815/13	11
14705022	03815/13	1
21202031	03840/13	15
21202032	03840/13	17
21202033	03840/13	18
21300521	03825/13	5
23000296	03840/13	5
23000297	03840/13	2
26216006	03825/13	4
32330281	03825/13	1
32331782	03825/13	10
34014085	03825/13	9
34014086	03825/13	9
34020035	03825/13	7
34020036	03825/13	7
34030971	03815/13	6
34070220	03840/13	13
34070221	03815/13	13
34070222	03815/13	13
34070230	03840/13	14
34100020	03840/13	22
34200271	03815/13	9
34300049	03815/13	8
34300052	03815/13	8
34300085	03815/13	8
34549025	03815/13	8
36310016	03815/13	10
36322005	03825/13	8
36990043	03840/13	19
36990044	03840/13	21
37010210	03840/13	23
37030408	03840/13	25
37155004	03840/13	24
38120158	03815/13	2
38120166	03840/13	16
38120167	03815/13	4
38120168	03815/13	12
38120169	03815/13	5
38120171	03840/13	1
38120186	03840/13	8
38120188	03840/13	7
38120275	03840/13	6
38120276	03840/13	3
39120035	03840/13	4
39220019	03840/13	20
42200134	03815/13	3
69000306	03825/13	3

Headquarters, Production Plant and R&D Centers

Rancilio Group s.p.a.
Viale della Repubblica 40
20010 Villastanza di Parabiago
Milano - Italy
Tel +39 0331 408200
Fax +39 0331 551437
www.ranciliogroup.com
info@ranciliogroup.com

Egro Suisse AG
Bahnhofstrasse 66
5605 Dottikon, Switzerland
Tel. +41 (0)56 616 95 95
Fax +41 (0)56 616 95 97
www.egrocoffee.com
info@egrocoffee.com

Worldwide Branch Locations

SPAIN

RanciliaGroup Espana, s.a.
Gran Vía de Carlos III, 84 3ª
Edificio Trade
08028 Barcelona - Spain
Tel. +34 902 884 275
Tel. +34 934 923 414
Fax +34 934 965 701
www.ranciliogroup.com
info-es@ranciliogroup.com

PORTUGAL

Rancilio Group Portugal Lda
Estrada da Falagueira nº 68 E
2700-365 Amadora-Lisboa - Portugal
Tel. +351 21 019 10 91
Fax +351 21 019 10 91

Rua Nova do Seixo 1282
4465-706 Leca do Balio-Porto - Portugal
Tel. +351 22 010 14 19
Fax +351 22 010 14 19
www.ranciliogroup.com
info-pt@ranciliogroup.com

GERMANY

Rancilio Group Deutschland GmbH
Talstrasse 27
97990 Weikersheim - Germany
Ph. +49 7934 99 29 30
Fax +49 7934 99 29 330
www.ranciliogroup.de
info-de@ranciliogroup.com

SWITZERLAND

Egro Suisse AG
Bahnhofstrasse 66
5605 Dottikon - Switzerland
Tel. +41 (0)56 616 95 95
Fax +41 (0)56 616 95 97
www.egrosuisse.ch
info@egrosuisse.ch

USA/CANADA

Rancilio Group North America Inc.
1340 Internationale Parkway / Suite 200
Woodridge, IL 60517 - U.S.A.
Ph: +1 630 914 7900
Fax: +1 630 914 7901
Toll Free: +1 877 726 2454
www.ranciliogroup.com
info@ranciliogroupna.com